3/4 Extension, Self-Closing

- For a 118 mm (4 1/2") Height Drawer
- Weight capacity: 25 kg (55 lbs.)/set
- Easy installation, no need for drawer sides
- Front adjustment bracket ±2 mm
- Screw or dowel-mount for easy assembly
- KCMA tested

Material: Steel, epoxy-coated; Color: white RAL 9010

Length	Item No.
270 (11")	558.54.727
300 (12")	558.54.730
350 (14")	558.54.735
400 (16")	558.54.740
450 (18")	558.54.745
500 (20")	558.54.750
550 (22")	558.54.755

1 set = L/R drawer member
L/R cabinet member

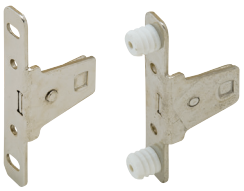

Flat Head #7 | VARIANTA ⌀5

Front Fixing Bracket

Material: Steel; Finish: nickel-plated

Mounting	Item No.
screw-mount	558.50.901
dowel-mount	558.50.903

Front Fixing Bracket Recommendations:

Screw-Mount	**Dowel-Mount**
Screw Diameter: 3.5 mm (#6)	Dowel Diameter: 10.9 mm
Minimum Length: 13 mm (1/2")	Drilling Diameter: 10 mm
	Dowel Length: 9.7 mm

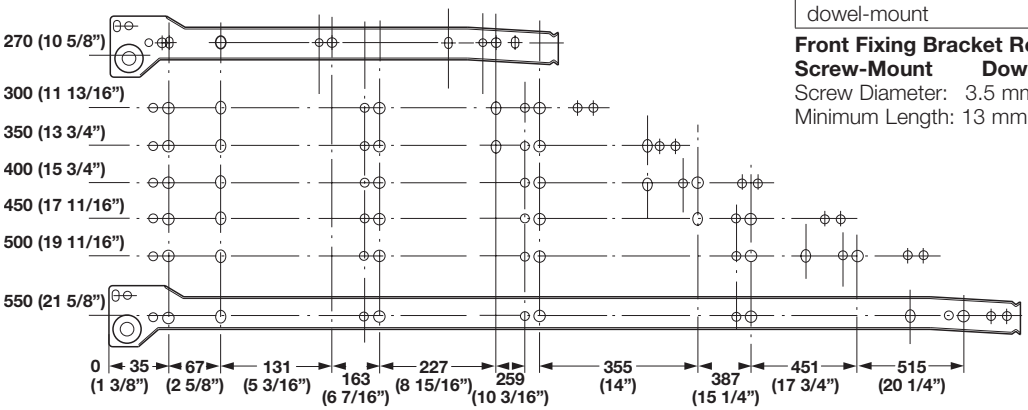

Insertion Ram

- For Blum mini press
- For attaching doweled brackets to panels

Material: Aluminum

Item No.
001.96.273

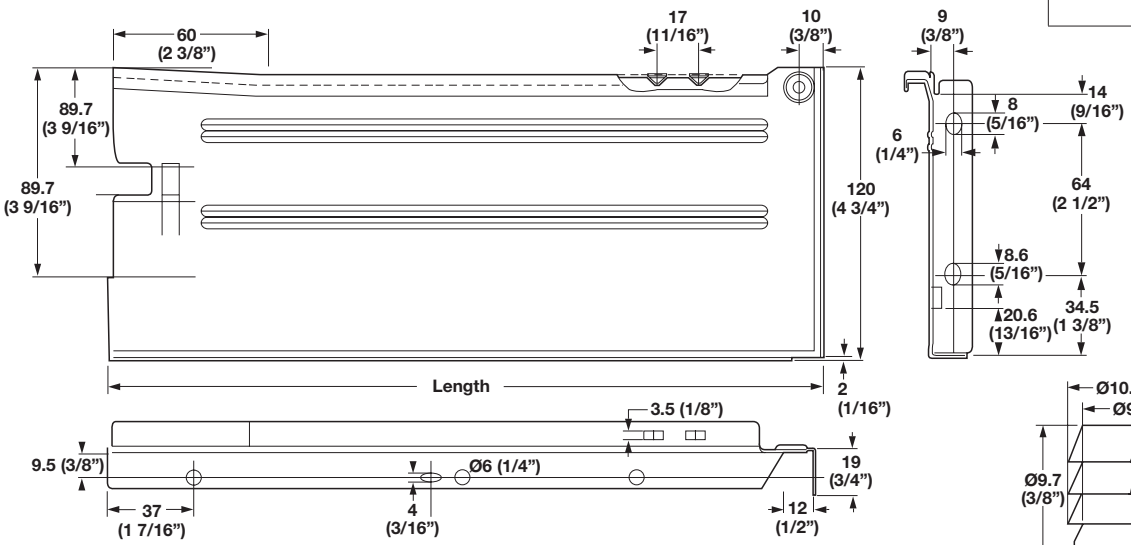

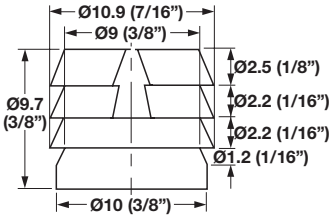

Dowel-mount

Optimal dowel-mount for front fixing bracket

Flat head screws	Pages 11.137–11.138, 11.140
Varianta screws	Page 11.146

Dimensional data not binding. We reserve the right to alter specifications without notice.

Dimensions in mm
Inches are approximate

8